SLIM57W

37, 57 and 62 Watt SLIM Wall packs are designed to cover the footprint of most traditional wall packs. They are suitable for mounting heights from 20' to 30', and replace HID Wattages from 200W MH to 320W MH. These ultra-high efficiency fixtures are available in cutoff or full cutoff models.

Color: White

Weight: 13.9 lbs

Project:

Type:

Prepared By:

Date:

Driver Info

Type	Constant Current
120V	0.48A
208V	0.32A
240V	0.28A
277V	0.24A
Input Watts	48.7W

LED Info

Watts	57W
Color Temp	5000K (Cool)
Color Accuracy	73 CRI
L70 Lifespan	100,000 Hours
Lumens	5,579
Efficacy	114.6 lm/W

Technical Specifications

Compliance

UL Listed:

Suitable for Wet Locations. Wall Mount Only.

IESNA LM-79 & LM-80 Testing:

RAB LED luminaires and LED components have been tested by an independent laboratory in accordance with IESNA LM-79 and LM-80.

Construction

Footprint:

Designed to replace RAB HID WP2 wall packs, both in size and footprint template, so upgrading to LED is easy and seamless

IP Rating:

Ingress Protection rating of IP66 for dust and water

Cold Weather Starting:

Minimum starting temperature is -40°C (-40°F)

Maximum Ambient Temperature:

Suitable for use in up to 40°C (104°F)

Housing:

Precision die-cast aluminum housing and door frame

Mounting:

Die-cast back box with four (4) conduit entry points and knockout pattern for junction box or direct wall mounting. Hinged housing and bubble level for easy installation.

Cutoff:

Cutoff (10°)

Recommended Mounting Height:

Up to 25 ft

Lens:

Microprismatic diffusion glass lens reduces glare and has smooth and even light distribution

Reflector:

Specular thermoplastic

Gaskets:

The unique design of the tight-lock gasket ensures no water or environmental elements will ever get inside the SLIM

Finish:

Formulated for high durability and long-lasting color

Copyright © 2020 RAB Lighting All Rights Reserved Note: Specifications are subject to change at any time without notice

Technical Specifications (continued)

Construction

Green Technology:

Mercury and UV free. RoHS-compliant components.

LED Characteristics

LED:

Long-life, high-efficiency, micro-power, surface mount LEDs; binned and mixed for uniform light output and color

Color Stability:

LED color temperature is warrantied to shift no more than 200K in color temperature over a 5-year period

Color Consistency:

7-step MacAdam Ellipse binning to achieve consistent fixture-to-fixture color

Performance

Lifespan:

100,000-Hour LED lifespan based on IES LM-80 results and TM-21 calculations

Other

Accessories:

Available accessories include polyshield and wire guard. Click here to see all accessories.

Equivalency:

Replaces 200W Metal Halide

Patents:

The design of the SLIM™ is protected by patents pending in US, Canada, China, Taiwan and Mexico

Warranty:

RAB warrants that our LED products will be free from defects in materials and workmanship for a period of five (5) years from the date of delivery to the end user, including coverage of light output, color stability, driver performance and fixture finish. RAB's warranty is subject to all terms and conditions found at rablighting.com/warranty.

HID Replacement Range:

Replaces 250W Metal Halide

Buy American Act Compliance:

RAB values USA manufacturing! Upon request, RAB may be able to manufacture this product to be compliant with the Buy American Act (BAA). Please contact customer service to request a quote for the product to be made BAA compliant.

Electrical

Driver:

Two Drivers, Constant Current, Class 2, 100-277V, 50/60Hz, 720mA, 100-277VAC 0.8A, 6kV Surge Protection, Power Factor 98.7%.

THD:

8.1% at 120V, 13.2% at 277V

Listings

DLC Listed:

This product is on the Design Lights Consortium (DLC) Qualified Products List and is eligible for rebates from DLC Member Utilities. DLC Product Code: P0000171U

Dimensions

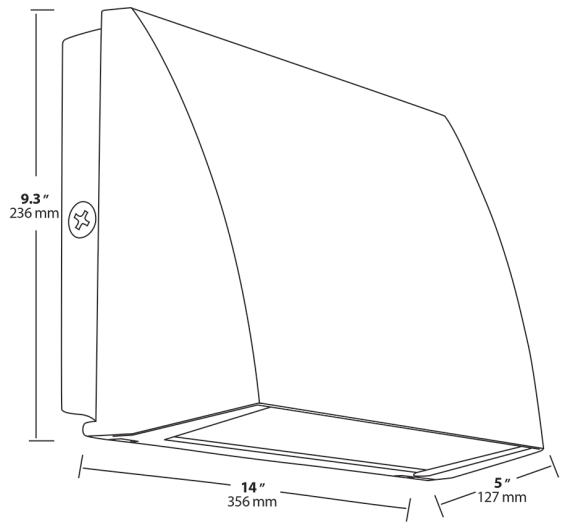

Features

- Covers footprint of most traditional wall packs
- Easy installation with hinged access, bubble level and multiple conduit entries
- Tight-lock gasket keeps elements out
- 100,000-hour LED lifespan
- 5-Year, No-Compromise Warranty

Copyright © 2020 RAB Lighting All Rights Reserved Note: Specifications are subject to change at any time without notice

Ordering Matrix

Family	Cutoff	Wattage	Color Temp	Finish	Driver Options	Options	Other Options
SLIM		57		W			
	Blank = Cutoff (10 degrees) **FC =** Full Cutoff (0 degrees)	**37 =** 37W **57 =** 57W **62 =** 62W	**Blank =** 5000K (Cool) **N =** 4000K (Neutral) **Y =** 3000K (Warm)	**Blank =** Bronze **W =** White	**Blank =** Standard (120-277V) **/BL =** Bi-Level **/D10 =** Dimmable **/480 =** 480V	**/LC =** Lightcloud® Controller **Blank =** No Option **/PC =** 120V Button Photocell **/PC2 =** 277V Button Photocell **/PCS =** 120V Swivel Photocell **/PCS2 =** 277V Swivel Photocell	**Blank =** Standard **USA =** BAA Compliant

Copyright © 2020 RAB Lighting All Rights Reserved Note: Specifications are subject to change at any time without notice