GN1LED13NSSTB

13 & 26 Watt Straight Shade LED Gooseneck Luminaire designed to match the architecture of Main Street storefronts and building perimeters. LED Gooseneck Straight Shade with 24" Goose Arm Style 1.

Color: Black

Weight: 11.3 lbs

Project:	**Type:**
Prepared By:	**Date:**

Driver Info

Type	Constant Current
120V	0.3A
208V	0.3A
240V	0.3A
277V	0.15A
Input Watts	15.2W

LED Info

Watts	13W
Color Temp	4000K (Neutral)
Color Accuracy	87 CRI
L70 Lifespan	100,000 Hours
Lumens	577
Efficacy	38 lm/W

Technical Specifications

Compliance

UL Listed:

Suitable for wet locations. Suitable for mounting within 1.2m (4ft) of the ground.

IESNA LM-79 & IESNA LM-80 Testing:

RAB LED luminaires and LED components have been tested by an independent laboratory in accordance with IESNA LM-79 and LM-80.

Performance

Lifespan:

100,000-Hour LED lifespan based on IES LM-80 results and TM-21 calculations

Construction

Fixture:

The GN1LED13NSSTB comes with the GOOSE1B Arm

Housing:

Precision die-cast aluminum housing, lens frame and mounting plate

Gaskets:

High-temperature Silicone

Mounting:

Heavy-duty mounting arm with "O" ring seal and stainless steel screw

Cold Weather Starting:

Minimum starting temperature is -40°C (-40°F)

Maximum Ambient Temperature:

Suitable for use in up to 40°C (104°F)

Shades:

15" Straight Shade offered

Finish:

Formulated for high durability and long-lasting color

Green Technology:

Mercury and UV free. RoHS-compliant components.

LED Characteristics

LED:

Single multi-chip, 13W high-output, long-life LED

Color Consistency:

3-step MacAdam Ellipse binning to achieve consistent fixture-to-fixture color

Copyright © 2020 RAB Lighting All Rights Reserved Note: Specifications are subject to change at any time without notice

Technical Specifications (continued)

LED Characteristics

Color Stability:

LED color temperature is warrantied to shift no more than 200K in color temperature over a 5-year period

Color Uniformity:

RAB's range of Correlated Color Temperature follows the guidelines of the American National Standard for Specifications for the Chromaticity of Solid State Lighting (SSL) Products, ANSI C78.377-2017.

Electrical

Driver:

Constant Current, Class 2, 100-277V, 50/60 Hz, 100-240VAC 0.3 - 0.15A, 277VAC 0.15A, THD ≤20%, PF 97.5%.

THD:

7.5% at 120V, 7.1% at 277V

Surge Protection:

4kV

Other

Patents:

The design of the Gooseneck is protected by patents pending in US, Canada, China and Taiwan

Warranty:

RAB warrants that our LED products will be free from defects in materials and workmanship for a period of five (5) years from the date of delivery to the end user, including coverage of light output, color stability, driver performance and fixture finish. RAB's warranty is subject to all terms and conditions found at rablighting.com/warranty.

Equivalency:

Equivalent to 75W Incandescent, 50W Metal Halide or 18W CFL

Buy American Act Compliance:

RAB values USA manufacturing! Upon request, RAB may be able to manufacture this product to be compliant with the Buy American Act (BAA). Please contact customer service to request a quote for the product to be made BAA compliant.

Dimensions

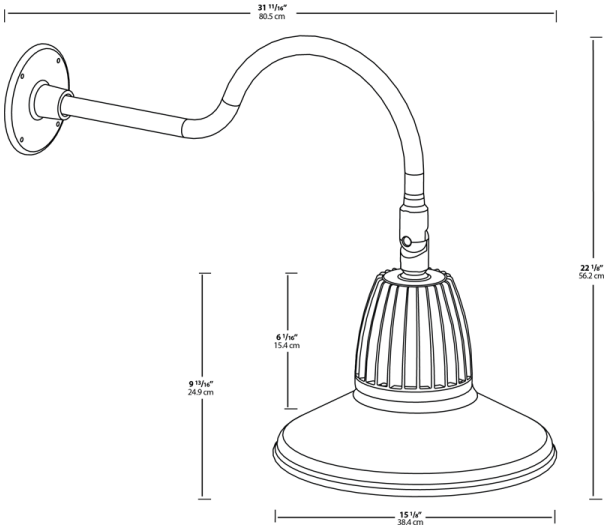

Features

- Adjustable 45° swivel joint
- Superior heat sink
- Die-cast aluminum housing
- 5-Year, No-Compromise Warranty

Copyright © 2020 RAB Lighting All Rights Reserved Note: Specifications are subject to change at any time without notice

GN1LED13NSSTB

Ordering Matrix

Family	Wattage	Color Temp	Reflector	Shade	ShadeSize	Finish
GN1LED	13	N	S	ST		B
	13 = 13W **26 =** 26W	**Y =** 3000K (Warm) **N =** 4000K (Neutral)	**R =** Rectangular **S =** Spot **Blank =** Flood	**ST =** Straight Shade	**11 =** 11" **Blank =** 15"	**B =** Black **W =** White **A =** Bronze **S =** Silver **G =** Hunter Green **YL =** Yellow **LB =** Light Blue **BL =** Royal Blue **BWN =** Brown **I =** Ivory **R =** Red

Copyright © 2020 RAB Lighting All Rights Reserved Note: Specifications are subject to change at any time without notice