G5362-TGY

UPC Code : 078477898369

Country Of Origin : China

RoHS Compliant : Yes

Available Colors :

Black, Brown, Ivory, Light Almond, Red, White

20 Amp, SmartlockPro® GFCI Receptacle/Outlet, Industrial Grade, Tamper-Resistant

SmartlockPro Self-Test Tamper-Resistant GFCI Duplex Receptacle Outlet, Extra Heavy-Duty Industrial Specification Grade, 20 Amp, 125 Volt, Back or Side Wire, NEMA 5-20R, 2-Pole, 3-Wire, Self-Grounding - Gray

Peace of mind, all the time. The SmartlockPro Self-Test GFCI tests itself even if you forget. Designed to meet the latest UL standard for auto-monitoring (self-test) our complete line of self-test GFCIs periodically conduct an automatic internal test to confirm that it can respond to a ground fault. With the slimmest profile on the market, the device allows for fast and easy installation, while Leviton's patented reset lockout mechanism prevents reset of the GFCI if it is not wired or operating correctly. The SmartlockPro Self-Test GFCI is the smart choice in ground fault circuit interrupter protection.

Technical Information

Mechanical Specifications

Screw Terminal Torque : 14-18 in-lbs

Patents*

CA2865659

*This list is provided for patent marking purposes only. A good faith effort is made to maintain the accuracy and completeness of this list. No legal inference should be drawn from the omission of a patent from this list.

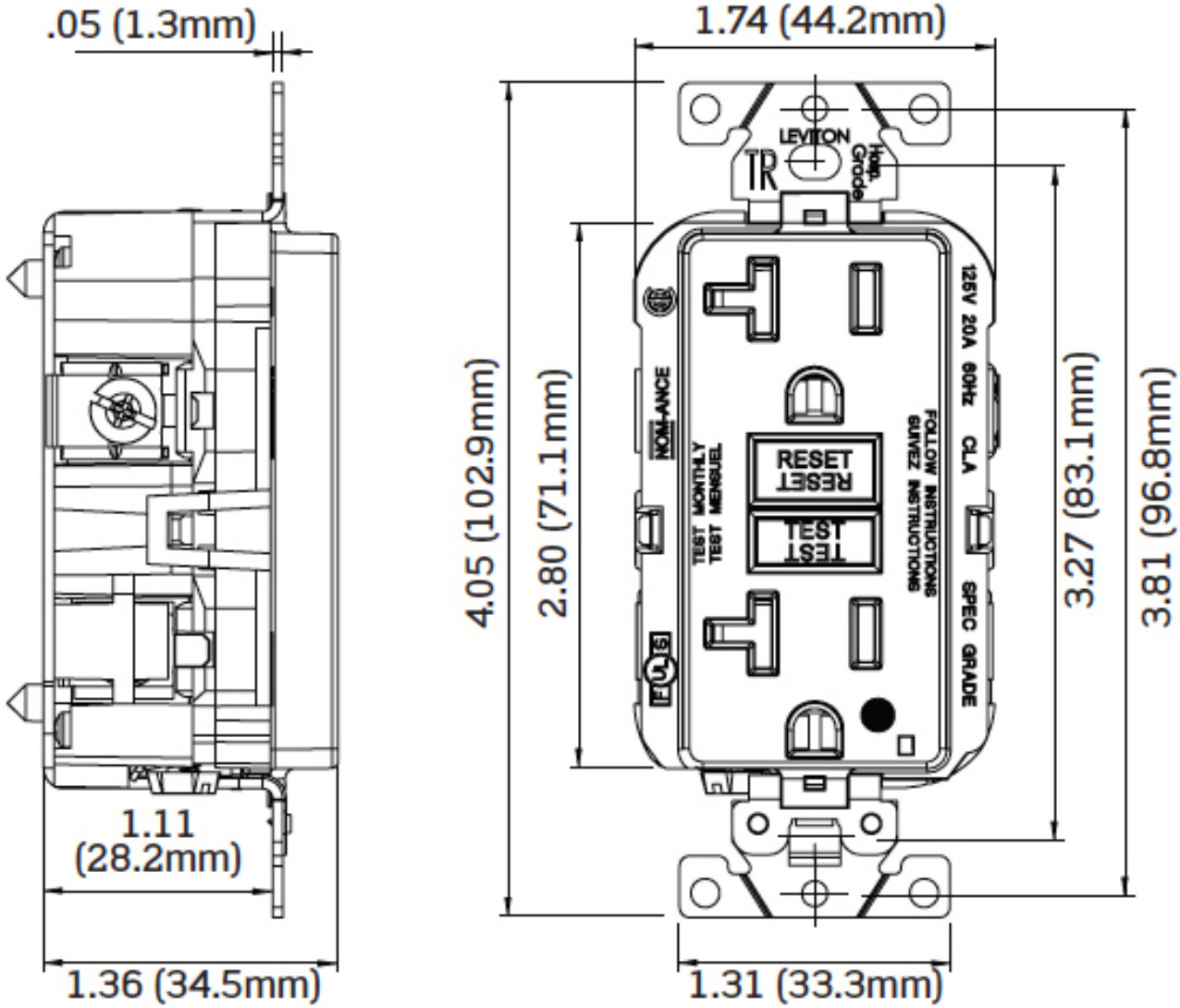

SPECIFICATION SUBMITTAL

JOB NAME:	CATALOG NUMBERS:	
JOB NUMBER:		

Leviton Manufacturing Co., Inc.
201 North Service Road, Melville, NY 11747
Telephone: +1-800-323-8920 · FAX: +1-800-832-9538 · Tech Line (8:30AM-7:30PM E.S.T. Monday-Friday): +1-800-824-3005

Leviton Manufacturing of Canada, Ltd.
165 Hymus Boulevard, Pointe Claire, Quebec H9R 1E9 · Telephone: +1-800-469-7890 · FAX: +1-800-824-3005 · www.leviton.com/canada

Leviton S. de R.L. de C.V.
Lago Tana 43, Mexico DF, Mexico CP 11290 · Tel.: (+52)55-5082-1040 · FAX: (+52)5386-1797 · www.leviton.com.mx

Visit our Website at: www.leviton.com
© 2021 Leviton Manufacturing Co., Inc. All Rights Reserved. Subject to change without notice.

Leviton has a global presence.
If you would like to know where your local Leviton office is located please go to:
www.leviton.com/international/contacts/