DRAWING NO. SE212356

CATALOG NO.	CONDUCTOR CODE (AWG)	CONDUCTOR NAVY 5	BOLT SIZE	FIG. NO.	DIMENSIONS B ±.06	C ±.04	H MAX.	K DIA. ±.02	L ±.09	N ±.04	O.D. ±.01	T REF.	Z MIN.	INSTALLATION TOOLING (# CRIMPS) DIE INDEX	COLOR CODE	MECHANICAL MD7-34R MD6	OUR840	Y8MRB-1 Y2MR 6	HYDRAULIC BCT500 Y500CT	Y750 Y35, BAT35 Y39, BAT750	Y46 4	Y45 3	DIELESS (# CRIMPS)	WIRE STRIP LENGTH
YAZ8CTC10	#8 AWG. [10mm² STR]	23	#10 [M5]	1	.75 [19]	.41 [10]	--	.21 [5]	1.43 [36]	.25 [6]	.27 [7]	.08 [2]	.27 [7]	49	RED	8 W8CRT (2) W8CVT (2)	8 X8CRT (2) W8CVT (2)	RED (2)	X8CRT (1) W8CRT (1) W8CVT (1)	8 U8CRT (2)	8 U8CRT (2)	8 U8CRT (2)	MECHANICAL: MY29-(1)	7/8
YAZ8CTC1045				2			.91 [23]		1.37 [35]															
YAZ8CTC1090				3			1.00 [25]		.74 [19]															
YAZ8CTC14			1/4 [M6]	1		.44 [11]	--	.27 [7]	1.56 [40]	.31 [8]			.33 [8]											
YAZ8CTC1445				2			.90 [23]		1.48 [38]															
YAZ8CTC1490	#8 AWG. [10mm² STR]	23		3	.75 [19]		1.00 [25]		.86 [22]		.27 [7]	.08 [2]		49	RED			RED (2)		U8CRT (2)	U8CRT (2)	U8CRT (2)	MECHANICAL: MY29-(1)	7/8

REV	DATE	DESCRIPTION	ECO	BY	C'H'K.
A	12/1/2008 12:00:00 AM	REDRAW AND CATALOG NUMBER UPDATON	16630	MA	BSK

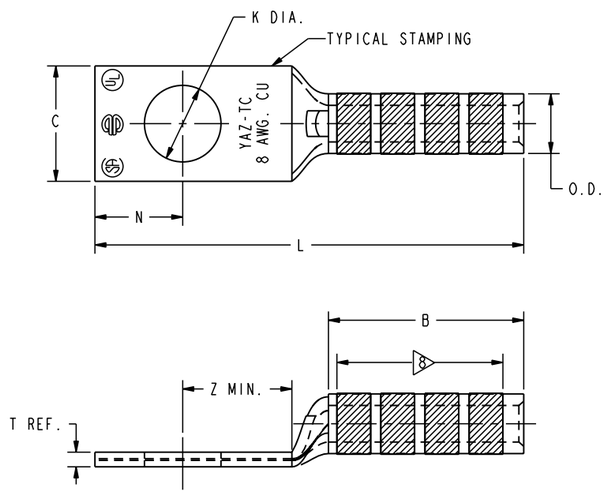

FIG. 1

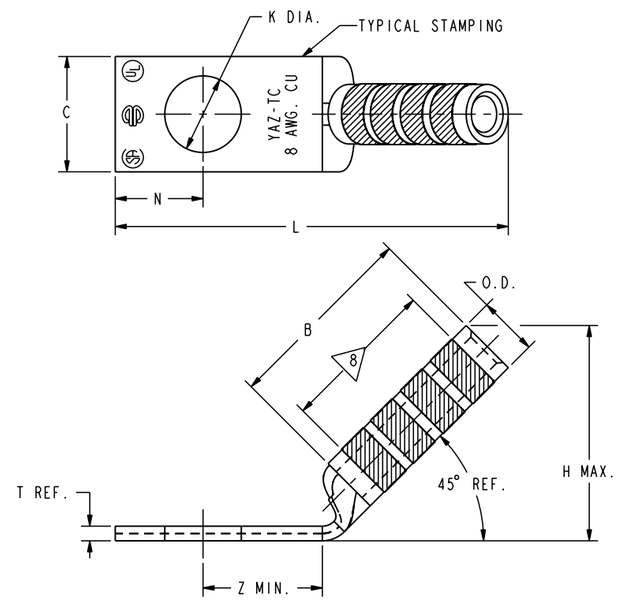

FIG. 2

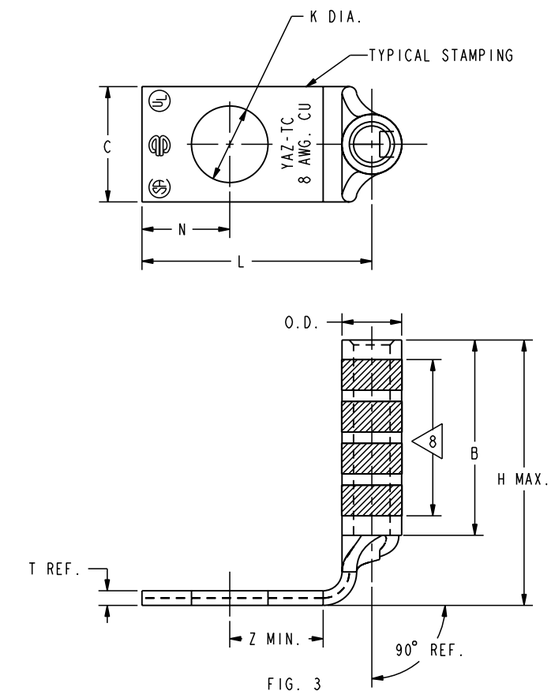

FIG. 3

NOTES:

1. MATERIAL: COPPER TUBING.
2. FINISH: TIN PLATED
3. CATALOG # PT6515 ADAPTOR IS REQUIRED TO USE "U" DIES IN Y45 SERIES TOOLS.
4. CATALOG # PUADP-1 ADAPTOR IS REQUIRED TO USE "U" DIES IN Y46 SERIES TOOLS.
5. NAVY CABLE SIZE MAY BE OMITTED ON SOME SIZES BECAUSE OF SPACE LIMITATIONS.
6. PERMANENT DIE IN TOOLING.
7. DIMENSIONS, METRIC WIRE, & METRIC BOLT SIZES IN BRACKETS [ ] ARE IN MILLIMETERS. DIMENSIONS ARE ROUNDED OFF TO THE NEAREST MILLIMETER, UNLESS OTHERWISE NOTED, AND ARE FOR REFERENCE ONLY.
8. OVERLAP 2 CRIMPS AS NEEDED AS NEEDED WITHIN THE LENGTH BETWEEN THE INK STAMPED CRIMPED AREA.

REV: PE0200

TO ORDER BURNDY® PRODUCTS CALL

UNITED STATES
1-800-346-4175 (LONDONDERRY, NH)

CANADA:
1-800-361-6975 (QUEBEC)
1-800-387-6487 (ALL OTHER PROVINCES)

FOR PRODUCT INFO: http://www.burndy.com

HYLUG™ (ONE HOLE CODE)

ITEM NO:	NA
CAT. NO:	YAZ8C-TC- (TABLE)
DRAWN BY:	D.BOISVERT 02/03/2000
CHECKER:	R.BOISVERT 01/10/2001
DSN APPVL:	J.MICHAUD 05/04/2000
MFG APPVL:	N/A --
QA APPVL:	S.BROWN --
MKT APPVL:	R.ROBICHEAU 02/01/2000
PROD FAM:	--
PROJECT #:	--
DOCUMENT TYPE:	Sales
REL LEVEL:	Released
SIZE	D
SCALE:	NTS
DRAWING NO	SE212356
REV	A
SHEET	2 OF 40

BURNDY